ELECTRONICS ENGINEERING SOCIETY

UDYAM'25

FUNCKIT

PS-2

Once upon a time in Mumbai there lived a great businessman named Harshadh Mehta. In order to raise capital for his firm, Mehta had taken loan from several banks of the country. Recently it has been alleged that he had scammed the banks. To clean his image, he decided to start repaying his debts. Mehta evaluated his current holdings and decided to pick one such bank to which he owes the maximum amount (which should obviously be less than his current holdings). You being his accountant, help Harshadh find the required bank.

ELECTRONICS ENGINEERING SOCIETY

UDYAM'25

Task Description :

The data will be stored in ROM in form of link list. The head of link list will be at address 0. A node at address 'n' represents following information:

i) Data of current node at address 'n'
ii) Address of next node at address 'n+1'

Address of next node of last node is denoted by '255'
The values in both fields (data, next) can be between 0-255 There is no overlapping of nodes.

The node represents bank and data represents the debt in that bank.

Example :

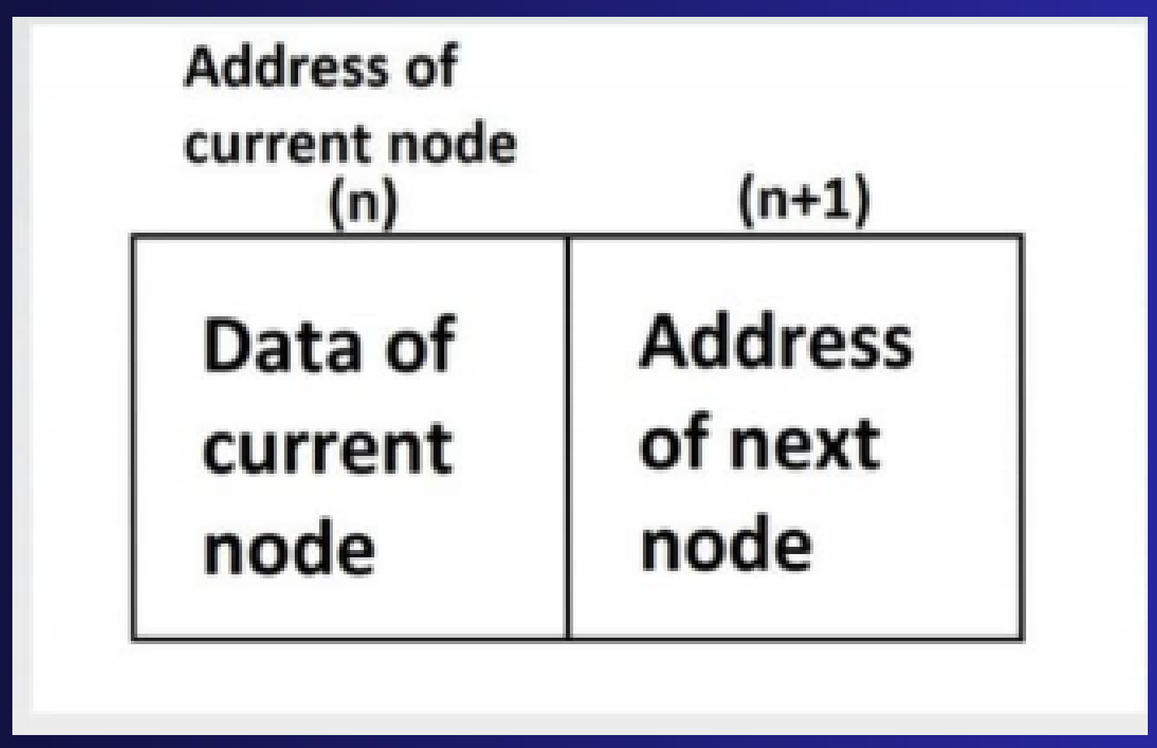

These link list will be denoted by the following sequence of numbers in ROM.

I

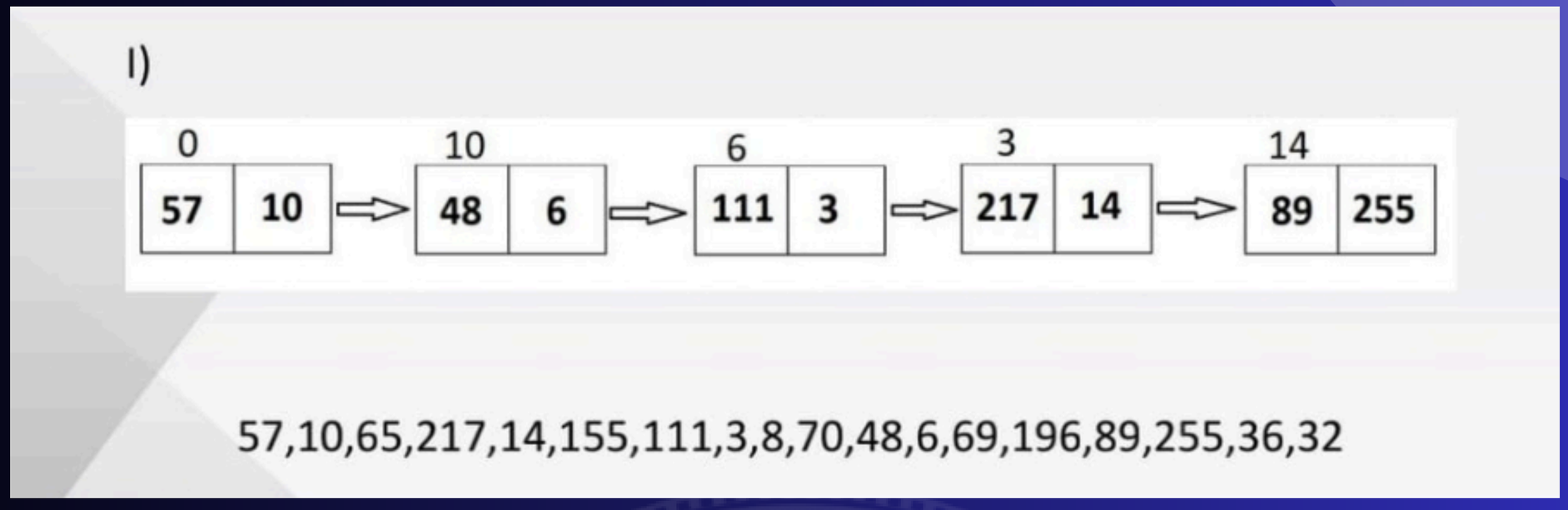

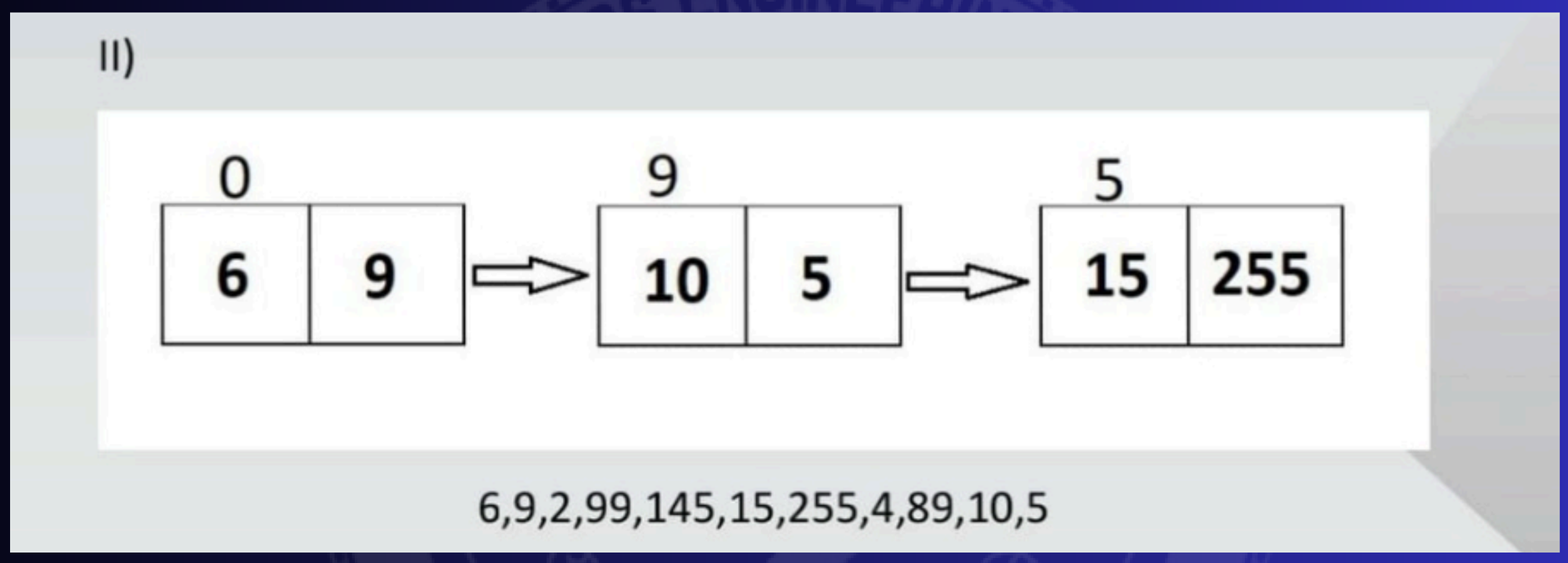

Task:

Read the value of current holdings(CH) of Harshad as a 8 bit number through logic state and the data about his debts as a binary file in ROM.

The given sequence of numbers forms a linked list, which terminates when the final address reaches 255. The starting index is 0, and each subsequent node is determined by the second number in the previous node which in term gives index of next node in list. Help him find the the bank to which he owes the maximum amount (<=CH) so that he can clear the debt to this bank. Display the address of the required bank and the amount Harshad is left with after this settlement.

ELECTRONICS ENGINEERING SOCIETY

UDYAM'25

PS:

1) It is guaranteed that CH>minimum of all his debts across all banks.

ii) If more than one solution exists, you can display any of them.

Example:

In link list I)

if CH=100 Address=14, Amount=11

In link list II)

if CH= 50 Address 5, Amount= 35

List of components allowed:

ROM(2732)

Comparator(7485)

Register(74179/74194)

Adder(74283)

Multiplexer (74157/74153)

Counter (74LS590,74161,74163,74LS169)

Decoder(74LS139/74HC154)

Encoder(74HC148)

Buffer(74HC241/74125)

Flip flops(74273/7474,74LS175,74LS109)

BCD to 7 segment decoder(74LS347/7448)

7 segment/BCD display

Logic Gates

Clock

ELECTRONICS ENGINEERING SOCIETY

UDYAM'25

Weightage of various Components:

IC	COST
ROM(2732)	25
Clock	10
7485, 74283, 74157, 74153, 74179, 74194, 74273, 74161, 74163, 74LS590, 74LS169, 74HC154, 74HC241, 74LS175, 7448, 74LS347	2
74LS139,74HC148,7474,74LS109	1
Logic gates, 74125	0.1
Logic states, Logic probes	Free

Deadline: 07/04/2025 11:59 PM

Submit the simulation file named "team_name.zip" in the google form. The ZIP file should contain the Proteus Design file, screen recording of the working of the circuit, and a PDF file containing a description of your approach and the number of each component used.

Feel free to contact us :

Shravani - 7620326399

Ansh - 7817944380